The European Energy Research Alliance and its CCS Joint Programme of Research

Massimo Busuoli
Head of ENEA Brussels Unit
EERA secretariat member

Geofluid 2010

Piacenza, 6th of October 2010

www.eera-set.eu

About EERA

- One of the official instruments of the SET-PLAN
- Initiative by 10 leading institutes to found a EERA
- Aim: accelerate development of new energy technologies
  - Harmonisation of national and EC programmes funded activities, decrease fragmentation
  - Strengthen, expand and optimise research capabilities
  - Draw on results from fundamental research
  - Mature technologies to hand over to industry driven research (industry groupings)
    - Build upon well accepted Strategic Research Agenda (SRA)
    - Link to Industry Initiatives

- **The Aim to be achieved through the creation of Joint programmes of research**

About the EERA

- Create virtual Centres of Excellence
- Participation in EERA in principle open to all research organisations
  - Not just a membership; need to bring in significant R&D capacity
- Based on **own** resources (not: additional budgets EC)
- Between industry driven and fundamental research

- Recent developments
  - Implementation governance structure
  - Prepare first joint programmes for launch
  - International cooperation (US, Japan)

About EERA

Governance Structure:

- First step: interim structure
  - From Founding Partners towards Executive Committee
  - 10 Founding Partners + 5 additional members
    - At least 2 members from the new Member States
  - Selection of the 5 additional member was based on relevance
    - i.e. R&D budget in energy research, coverage of multiple research areas, leading position in EU-research etc.
- Next phase: new executive committee will be selection based on relevance **and contribution to EERA programmes**
- Boundary condition: a Member State can only be represented once
- Rights and responsibilities described for:
  - Members of an EERA programme
  - Coordinators of an EERA programme
  - Executive Committee

EERA Governance – ExCo composition

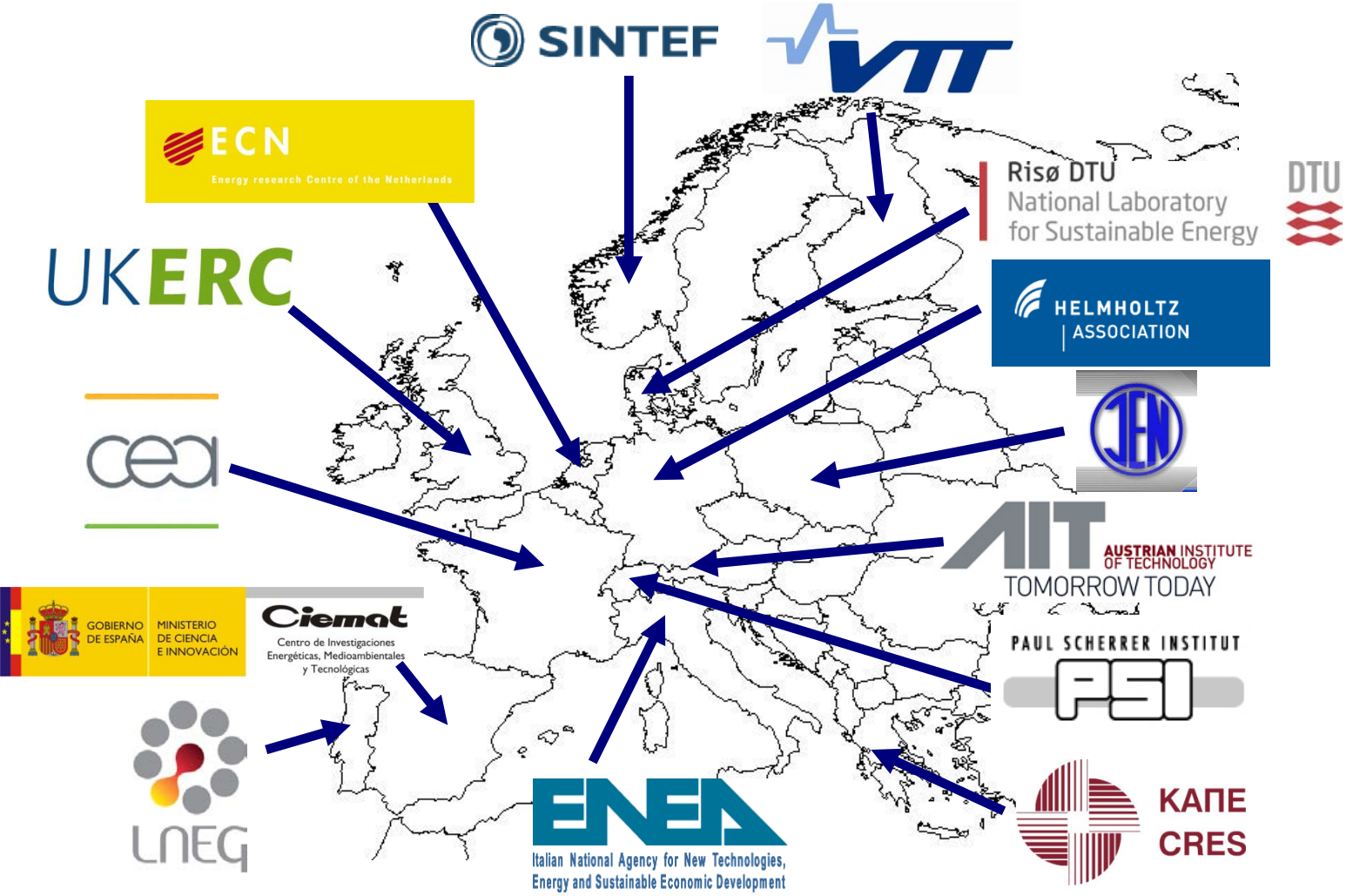

With the support of:

EUROHORCs
EUROPEAN HEADS OF RESEARCH COUNCILS

EUA
European University Association

Link to other bodies

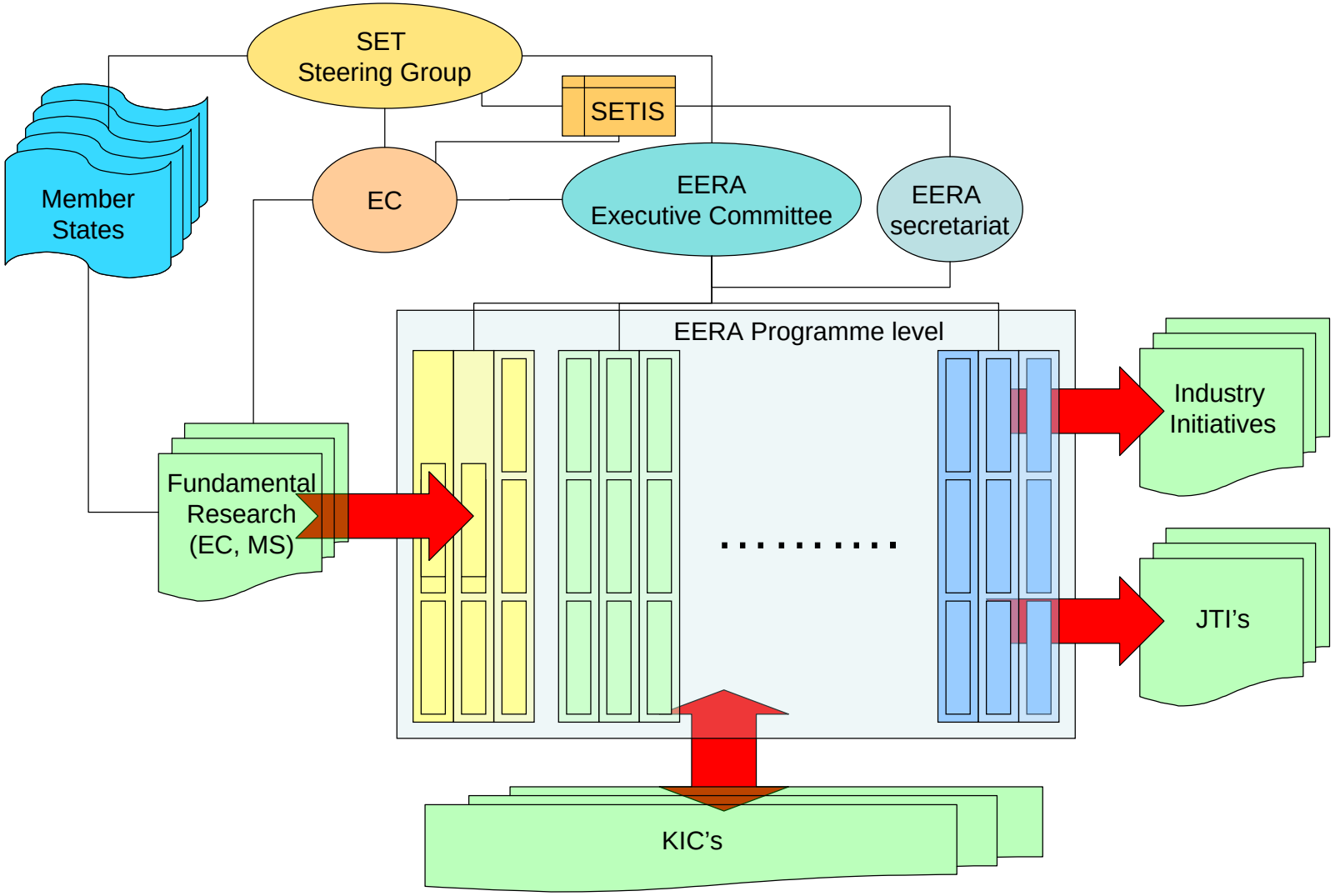

EERA: joint programming

What kind of cooperation can be foreseen?

- Harmonisation of research programmes
  - Exchange of information
  - Exchange of personnel

    } Insufficient for EERA
  - Common strategy to tackle (new) research questions
    - Too many topics for a single institute
    - Avoid duplication, ensure complementary of programmes
    - Agree on who does what (and share results)
- Facilities
  - Sharing of facilities
  - Building new facilities
    - Owned by multiple institutes

    } A breakthrough

Establishing the Joint programmes

- EERA programmes are open to all (public) research organisations that can provide relevant contribution
  - Not just a membership; need to bring in significant R&D capacity
    - Full member: threshold (person years / year)
    - Otherwise: associated partnership

- Programmes are established by mean of focused workshops
  - Awareness events to launch the participant's selection to the workshops are announced on EERA website (www.eera-set.eu)
  - Selection of the participants in EERA workshops is normally based on relevance and commitment
    - Size of programme (staff) and facilities
    - Ability and interest to align resources (availability of "own resources")

  - After selection: selected key players to build the core of the programme
  - When programme is up and running: new players may (and will!) enter

- Important: link to industry is always taken into consideration

EERA: Current status

- Governance structure has been implemented
- Four Joint Programmes have been launched and are starting activities
  - Wind
  - PV
  - Smart Grids
  - Geothermal
- Several more Joint Programmes are under development
  - CCS
  - Bioenergy
  - Materials for Nuclear
  - Basic Science for Energy
  - Smart Cities
  - Fuel Cells & Electrolysers
  - Energy storage
  - CSP
  - Marine energy

EERA Joint Programmes

- Total resources committed impressive
  - PV: ≈ 1000 person months / year (pm/y)
  - Wind: ≈ 1500 (pm/y)
  - Geothermal energy: ≈ 3000 (pm/y)
  - Smart Grids: ≈ 650 (pm/y)
  - Note: still start up phase (!)
- Links with EII being established
  - CCS, Smart Grids, PV, Wind etc.

EERA Joint Programmes

- Many partners all across Europe
  - **PV**: ECN (the Netherlands –coordinator) AIT (Austria), CEA-INES (France), CIEMAT (Spain), CRES (Greece), CREST (UK), EMPA (Switzerland), ENEA (Italy), EPFL (Switzerland), FhG-ISE / ISET (Germany), Fyzikalni ustav Akademie ved Ceske republiky (Czech Republic), FZ Juelich (Germany), HZB (Germany), IMEC (Belgium), Imperial College (UK), IPP (Germany), JRC, LNEG (Portugal), Risø/DTU (Denmark), SINTEF (Norway), University of Gent (Belgium), University of Ljubljana (Slovenia), VTT (Finland), ZSW (Germany)
  - **Wind**: Risø DTU (Denmark – coordinator), ECN (the Netherlands), CRES (Greece), CENER (Spain), CIEMAT (Spain), FhG IWES (Germany), LNEG (Portugal), UoP (Portugal), SINTEF (Norway), VTT (Finland), UoS (UK)
  - **Geothermal**: CEGL (Italy – coordinator), BRGM (France), CNR (Italy), CNRS (France), CRES (Greece), ETHZ (Switzerland), GFZ (Germany), ISES, ISOR (Iceland), KIT (Germany), LIAG (Germany), TNO (Netherlands)
  - **Smart Grids**: ERSE (Italy – coordinator), ENEA (Italy – coordinator), ECN (the Netherlands), Risø/DTU (Denmark), VITO (Belgium), VTT (Finland), AIT (Austria), IWES (Germany), JRC-IE, LABEIN (Spain), LABORELEC (Belgium), SINTEF (Norway), TUBITAK (Turkey)

Joint Programme on CCS

- EERA CCS activities started in December 2008
- Several topical workshops have been organized

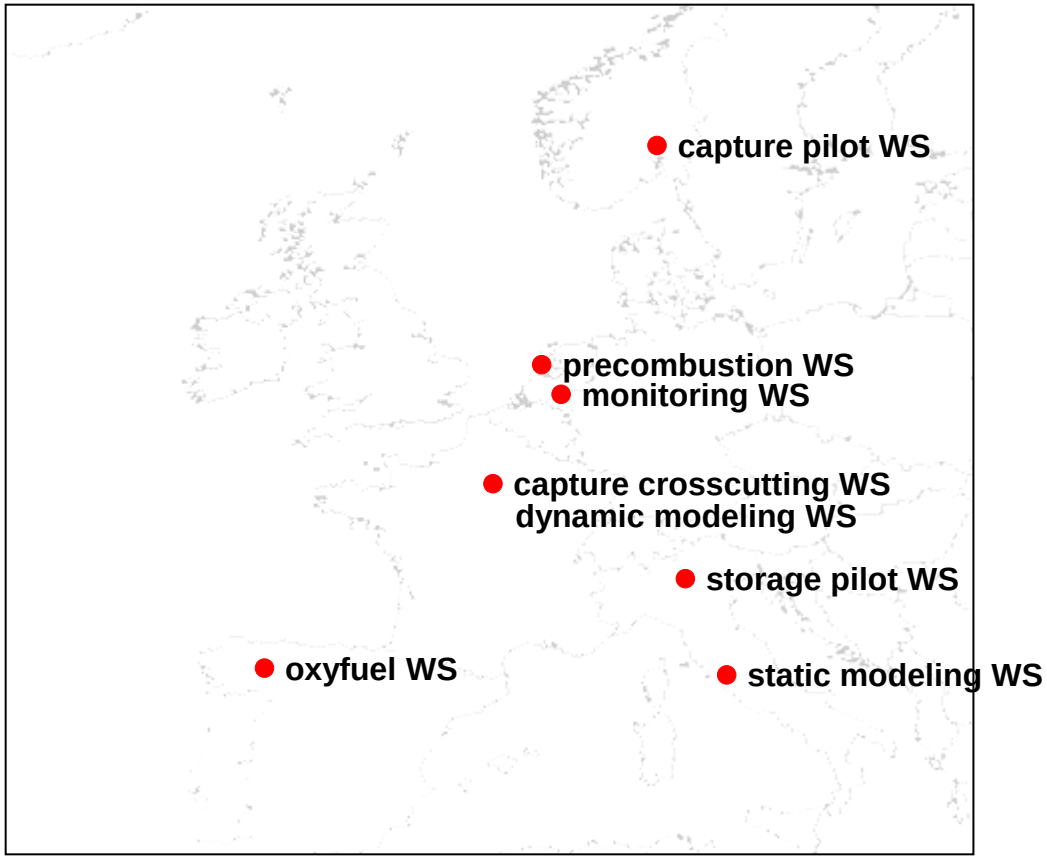

Joint Programme on CCS

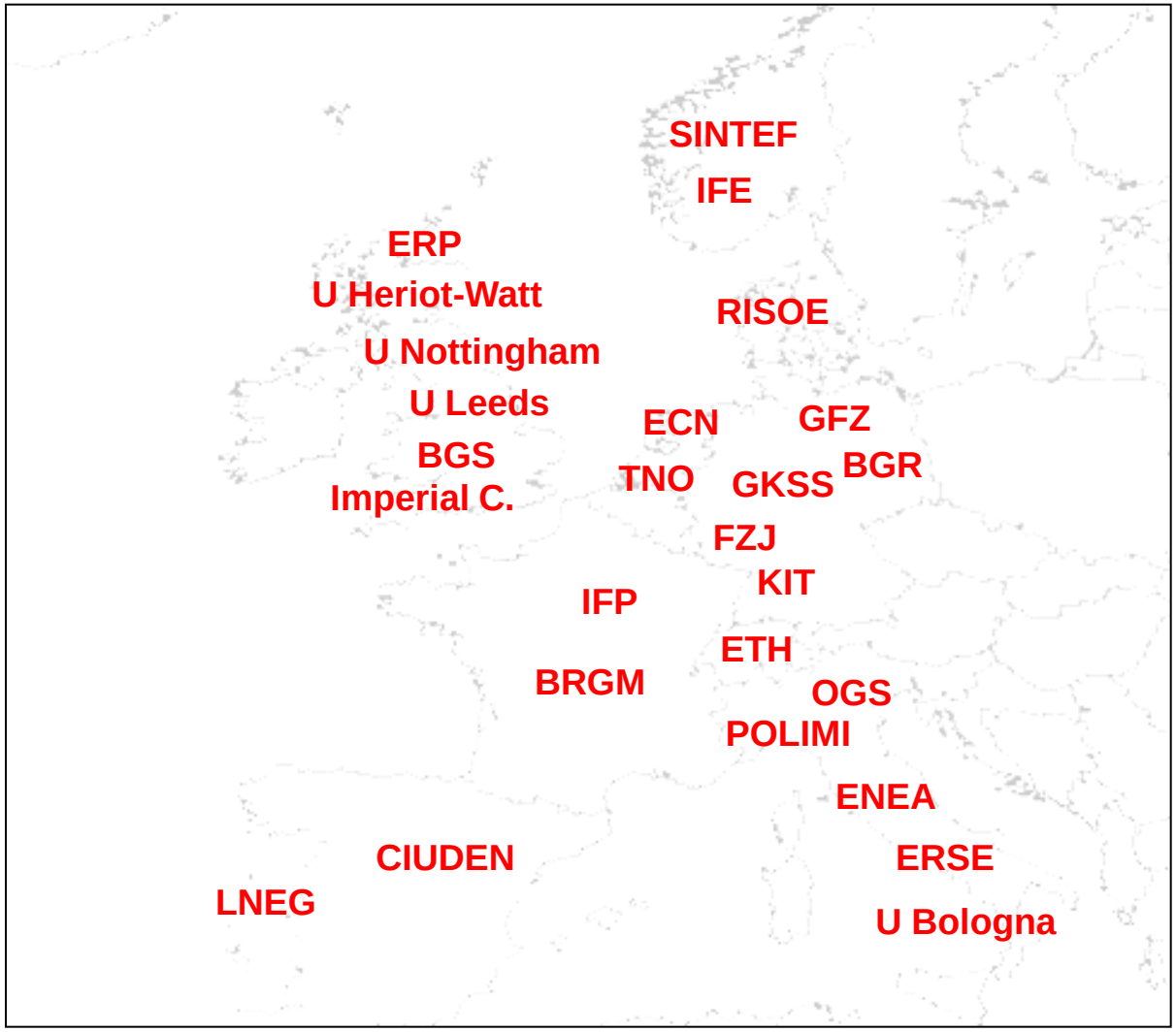

26 different organisations participated in the 7 workshops organized until now

<u>Observation</u>
EERA founding members involved in CCS ...
... but in general are not key players

Joint Programme on CCS

- Capture
  - post combustion
    - e.g. solvents
  - pre-combustion
    - e.g. membranes, sorbents
  - oxyfuel
    - e.g. materials
  - cross-cutting issues
    - e.g. process simulation
- Storage
  - static modeling
    - e.g. fracture characterisation
  - dynamic modeling
    - e.g. large scale modeling
  - monitoring
    - e.g. flux measurements
  - remediation (tbd)

➡ R&D program is currently being elaborated

Joint Programme on CCS

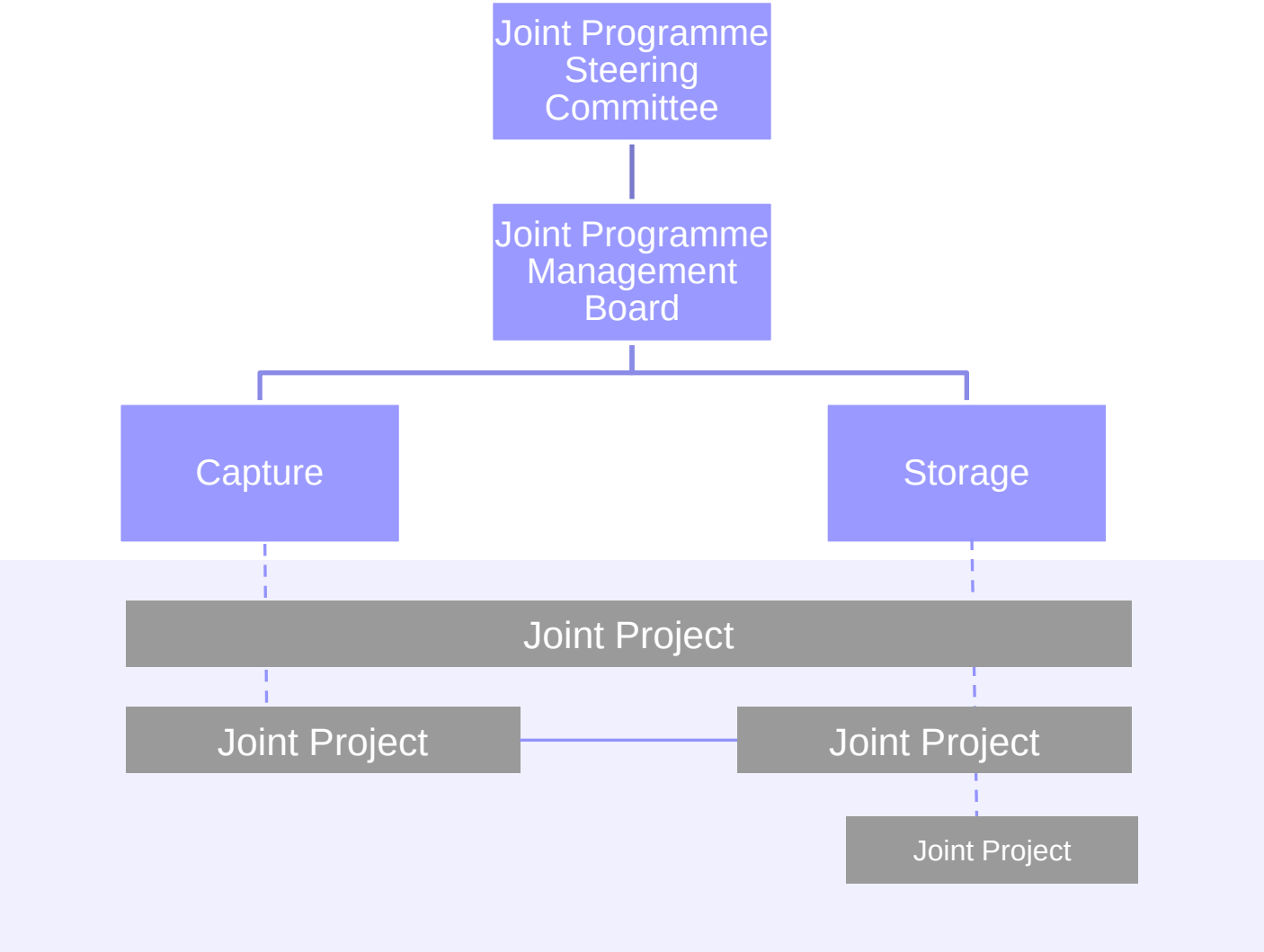

JP on CCS – next steps

- Consolidation of DoW
- Approval by EERA Executive Committee
  - early November
- Formal launch
  - SET Plan Conference, 15-16 November
- Start of activities defined in the DoW

Some final words: EERA InCo activities

International cooperation

- Visit to US
  - Joint delegation EERA, EC
  - National laboratories: NREL, NETL
  - High interest from US to link to the EERA (pre-competitive)
  - EERA will participate in EU/US Energy Council
- Visit to Japan (March & September)
  - Joint delegation EC and EERA
  - Some National Laboratories visited
  - High interest from Japan to link to the EERA

How can I?... Role of the Universities and other public research bodies

EUA mapping initiative:

- All EUA associated received a questionnaire to map the research capabilities of European Universities in the Energy field – IMPORTANT TO PROVIDE IT BACK

- Joint programme participation possibility:
  - Full members position (able to reach the minimum investment threshold of 5p/y/y per joint programme)
  - Associate to a full member already in

Thank you for the attention!

massimo.busuoli@enea.it

Geofluid 2010
Piacenza, 6th of October 2010